VIMEX INTERNATIONAL CORPORATION

1-(800)227-0075

# 16mm Molded Case Rotary Potentiometer

## MC16SB

## Part Number

MC16SB - B 50K , L - 1.2

- B → Type
- 50K → Resistance value
- 1.2 → Shaft length

Dimensions

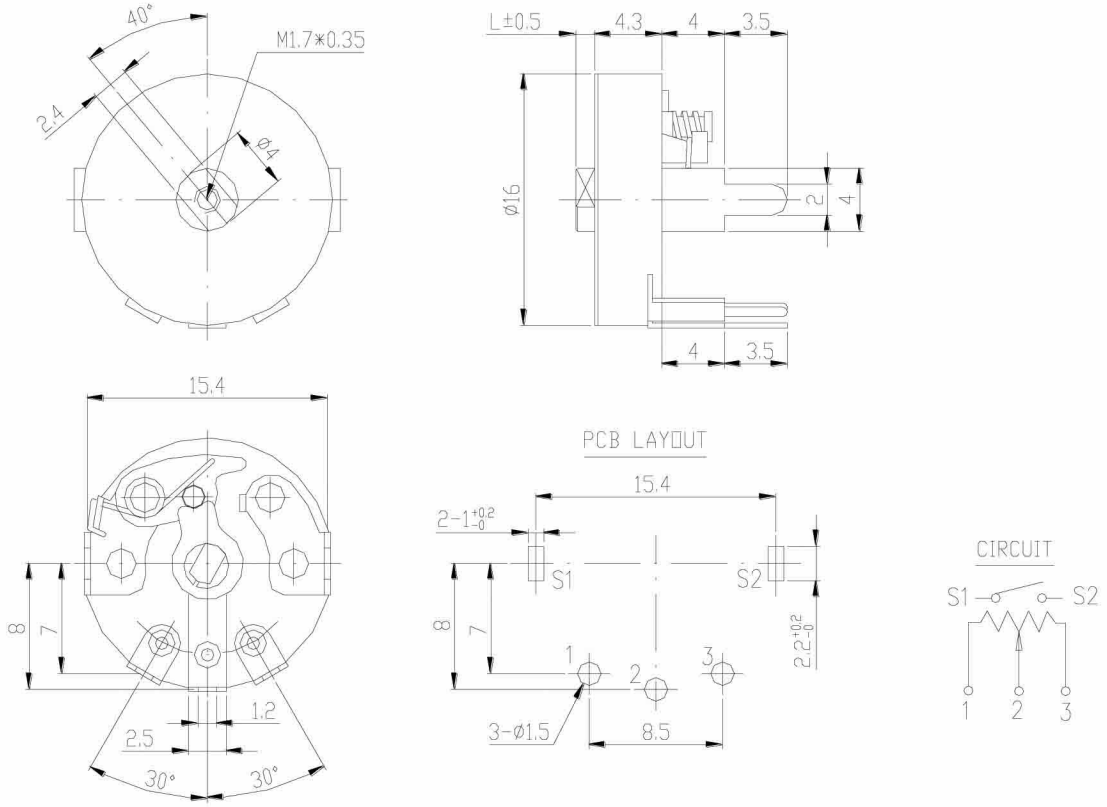


Shaft Type

| No Tap Type | |
|---|---|
| L | 1.5-5.0 |
| A | 2.2±0/0.1 |
| D | φ3.5 |

| Tap Type | |
|---|---|
| L | 1.0-5.0 |
| A | 2.2±0/0.1 |
| D | φ3.5 |

| Slotted Type | |
|---|---|
| L | 1.5-5.0 |
| A | 2.2±0/0.1 |
| D | φ3.5 |