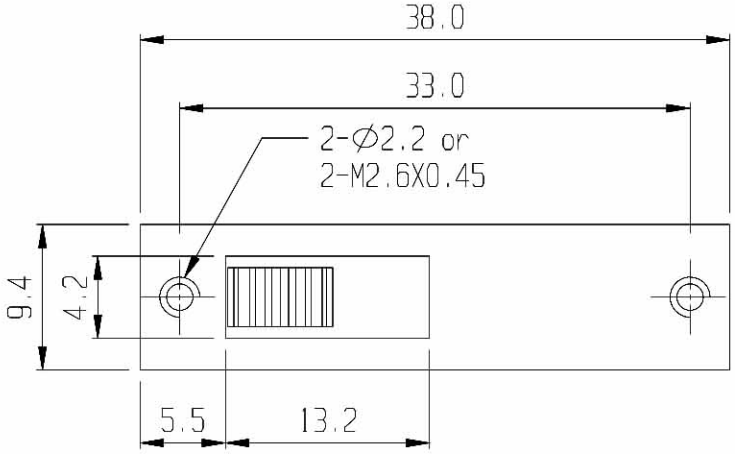

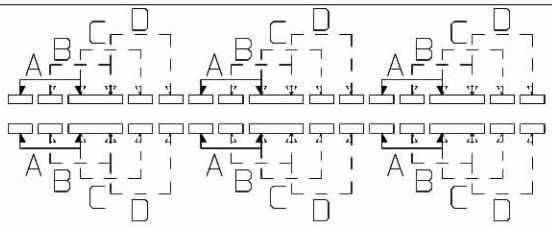

SCHEMATIC

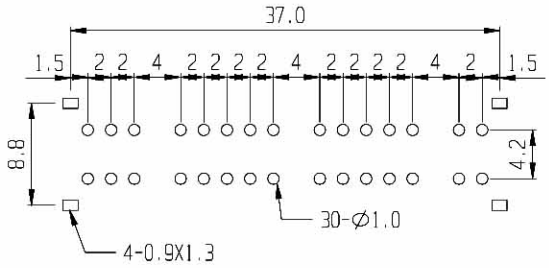

PCB LAYOUT

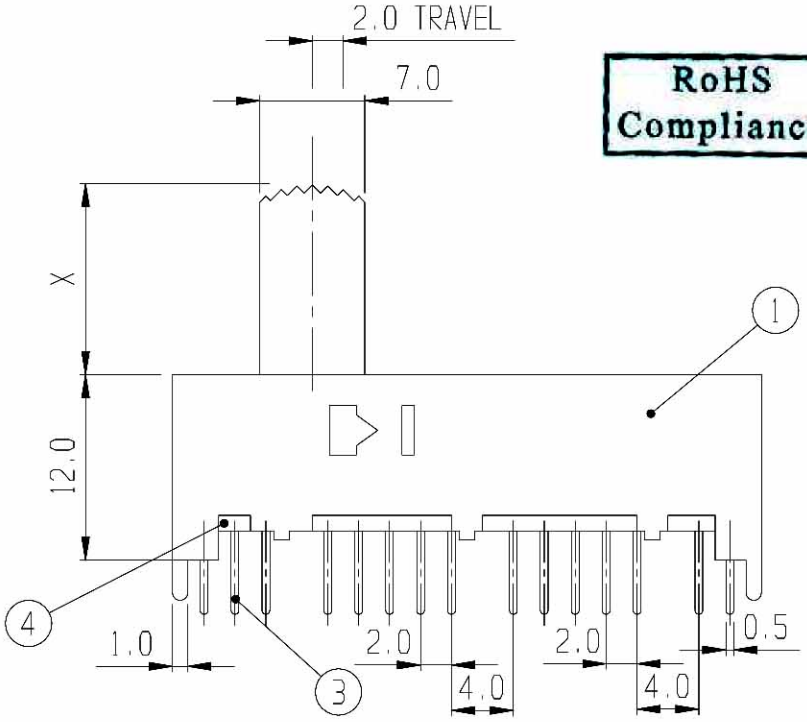

RoHS Compliance

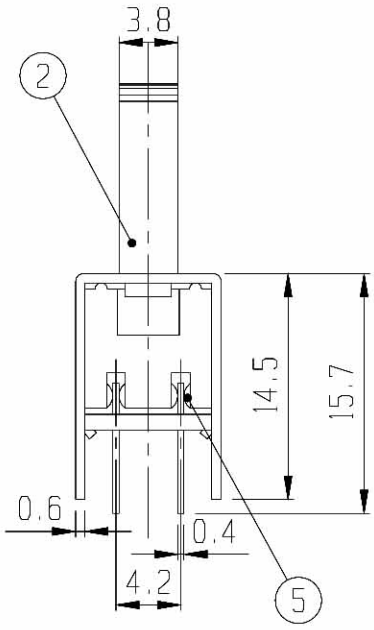

NO	PART	MATERIAL	QTY	REMARKS	NO	PART	MATERIAL	QTY	REMARKS
7	BALL	STEEL	2						
5	CONTACT	P B S	6	Ag PLATED	6	SPRING	STEEL WIRE	1	
3	TERMINAL	BRASS	30	Ag PLATED	4	TERMINAL BASE	PHENOL RESIN	1	NATURAL
1	FRAME	S P C C	1	Ni PLATED	2	KNOB	P O M	1	G 2-15

ISSUED	SPECIFICATION	TITLE: SLIDE SWITCH (6P4T)			
	RATING: DC 30V 0.5A	MODEL NO: SS-64D01			
	CONTACT RESISTANCE: 30mΩ max.				
	INSULATION RESISTANCE: 500MΩ at 500V DC	TOLERANCE	UNIT: MM	DWN.	
	WITHSTAND VOLTAGE: AC 500V for 1 minute	UP TO 1.0:±0.1	SCALE: 2:1	CHK"D.	
	OPERATION FORCE: REFER ATTACH SPECIFICATION	1.0 TO 10.0:±0.2	VERSION: 01		
	SWITCHING LIFE: 10K cycles min.	OVER 10.0:±0.3	DRWG NO:	APPD.	
BY:	VIMEX INTERNATIONAL CORPORATION				
DATE: 10-JUN-1999					