VIMEX INTERNATIONAL CORPORATION

800-227-0075

http://www.vimex.com

Product Drawing

No.	Description	Material	Q'TY	Finish
1	Body	0.4T Steel	1	Gold Plated
2	Terminal	0.25T Brass	1	Gold Plated
3	Barrel (Sleeve)	0.3T Brass	1	Gold Plated
4	Insulator A	PBT	1	Red Color
5	Insulator B	PBT	1	Black Color
6	Nut	2.2T Brass	1	Nickel Plated
7	Washer	0.4T Brass	1	Nickel Plated

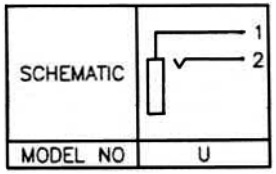

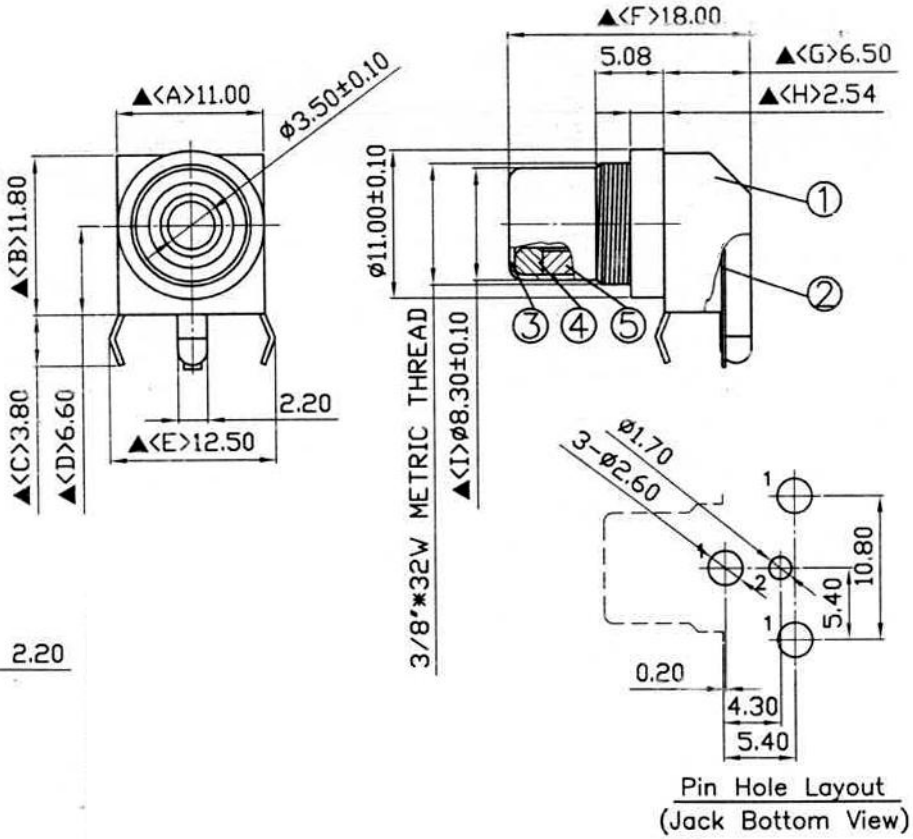

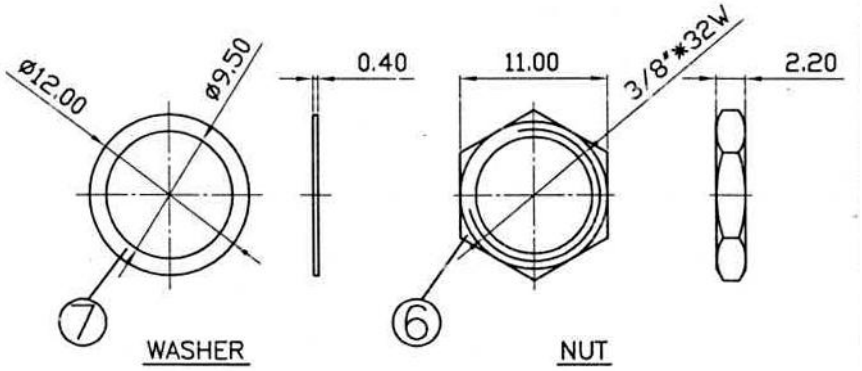

				Description:	Standard Outline Drawing
Page:	1	Date:	2011-05-10	P/N	SCJ-0360-2
of:	1	Revision:	1.0		