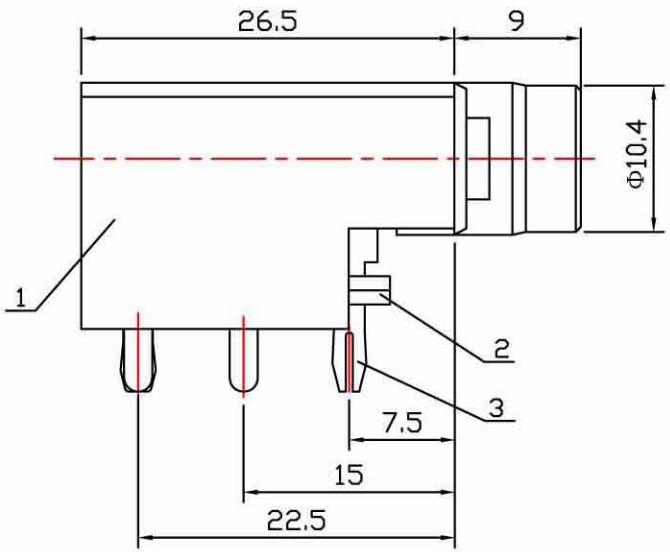

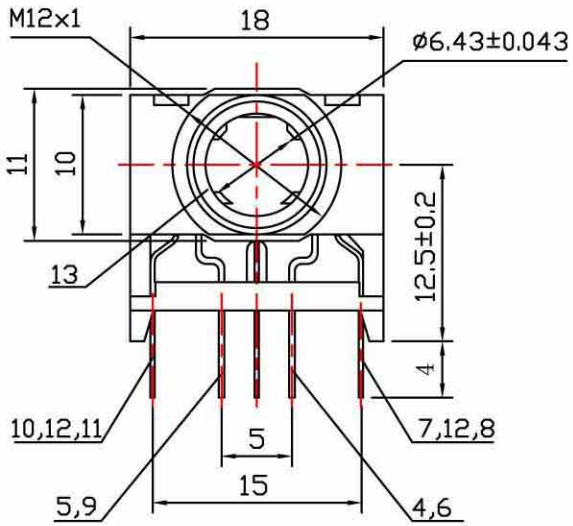

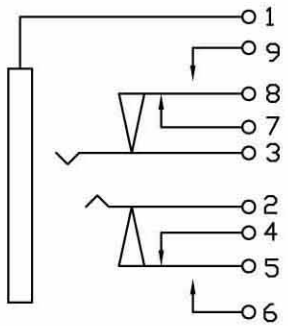

CIRCUIT DIAGRAM

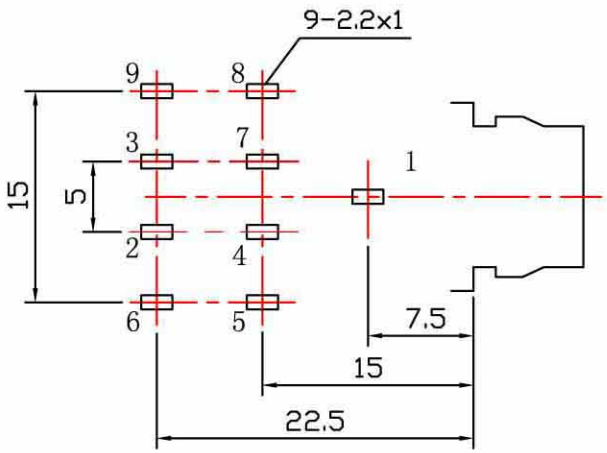

PCB MOUNTING HOLES (TOLERANCE: ± 0.1)
(BOTTOM VIEW)

NO.	NAME	QTY	MATERIAL (THICK, COLOR)	REMARK
13	SLEEVE	1	H59	CuSn-PLATED RoHS COMPLIANT
12	SEPARATOR	2	POM (black)	RoHS COMPLIANT
11	9# TERMINAL	1	QSn6.5-0.1Y t=0.25	Ag-PLATED RoHS COMPLIANT
10	8# TERMINAL	1	QSn6.5-0.1Y t=0.35	
9	7# TERMINAL	1	H62Y t=0.4	
8	6# TERMINAL	1	QSn6.5-0.1Y t=0.25	
7	5# TERMINAL	1	QSn6.5-0.1Y t=0.35	
6	4# TERMINAL	1	H62Y t=0.4	
5	3# TERMINAL	1	QSn6.5-0.1Y t=0.3	
4	2# TERMINAL	1	QSn6.5-0.1Y t=0.3	
3	1# TERMINAL	1	QSn6.5-0.1Y t=0.3	
2	COVER	1	PC (black)	RoHS COMPLIANT
1	HOUSING	1	ABS (black)	RoHS COMPLIANT

Dimensions unless otherwise specified	
Size Range	Tolerance
L≤ 1	±0.15
1 < L≤ 8	±0.20
8< L≤ 23	±0.25
23< L≤ 50	±0.30
ANGAL	±1°

VIMEX INTERNATIONAL CORPORATION

SCALE: 1:1

VIEW:

UNIT: mm

NAME. PHONE JACK

CAT. NO. SCJ-0648