VIMEX INTERNATIONAL CORPORATION

1-(800)227-0075

12mm Insulated Shaft Rotary Potentiometers

RP12HPD

Part Number

RP12HPD - B 50K, L - 20 F / (M) or (P)

- B → Taper
- 50K → Resistance Value
- 20 → Shaft Length
- F → Shaft Type (M)metal or (P) plastic

Dimensions

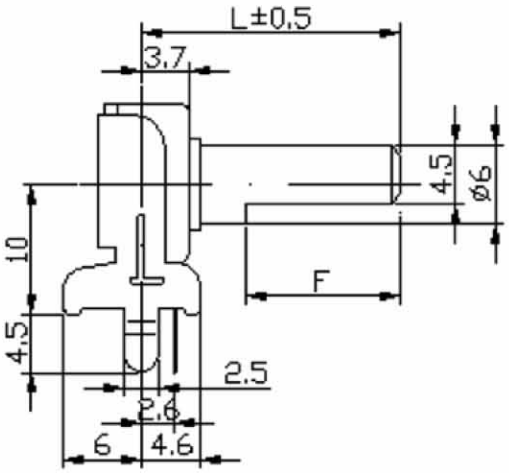

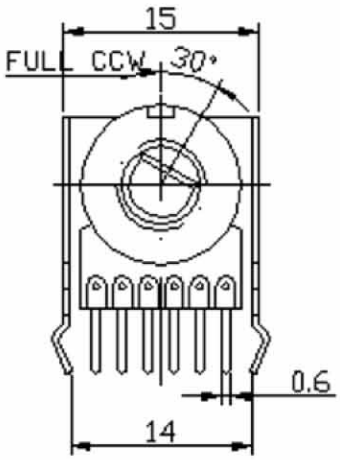

P.C.B LAYOUT

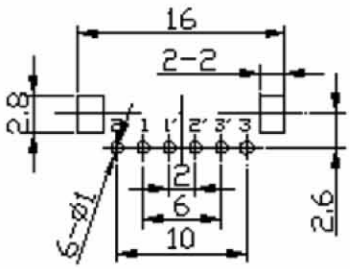
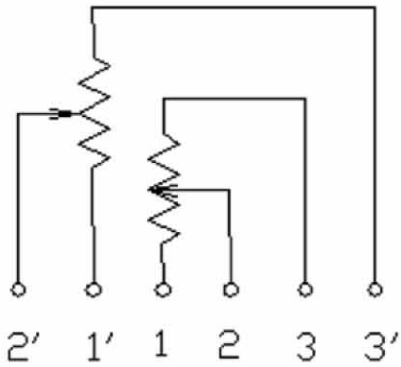
CIRCUIT