VIMEX INTERNATIONAL CORPORATION

1-(800)227-0075

12mm Molded Case Rotary Potentiometer

MC12NA

Part Number

MC12NA - B 50K , L - 1.2

- B → Type
- 50K → Resistance value
- 1.2 → Shaft length

Dimensions

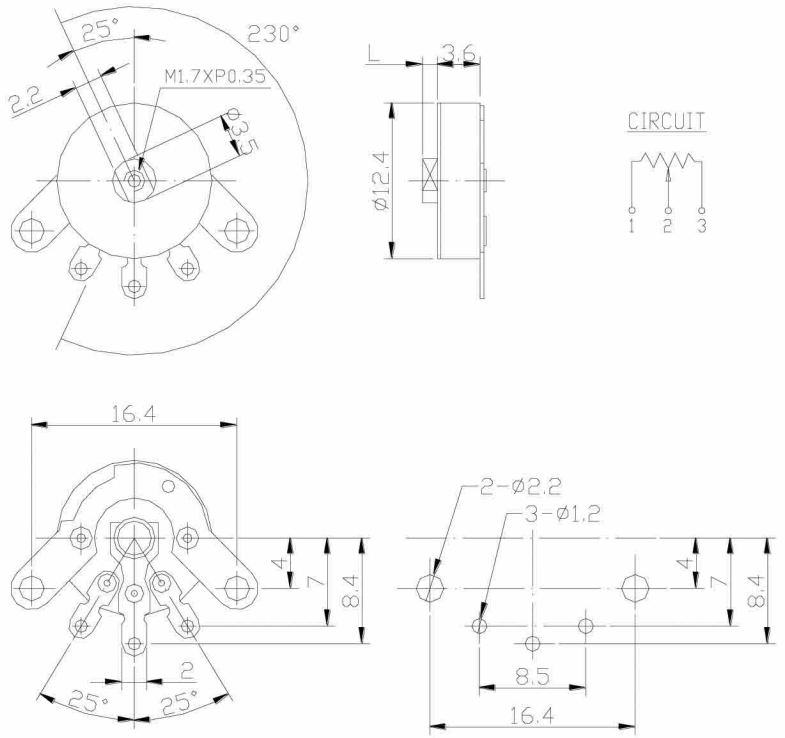

Shaft Type

No Tap Type	
L	1.5-5.0
A	2.2±0/0.1
D	φ3.5

Tap Type	
L	1.0-5.0
A	2.2±0/0.1
D	φ3.5

Slotted Type	
L	1.5-5.0
A	2.2±0/0.1
D	φ3.5